Foot-Mounted SQUIRREL CAGE MOTORS HXUR 805...1009

Dimensions

Mounting disposition: IM B3 = IM 1001

1-4 NL

Degirmen Fan Motoru

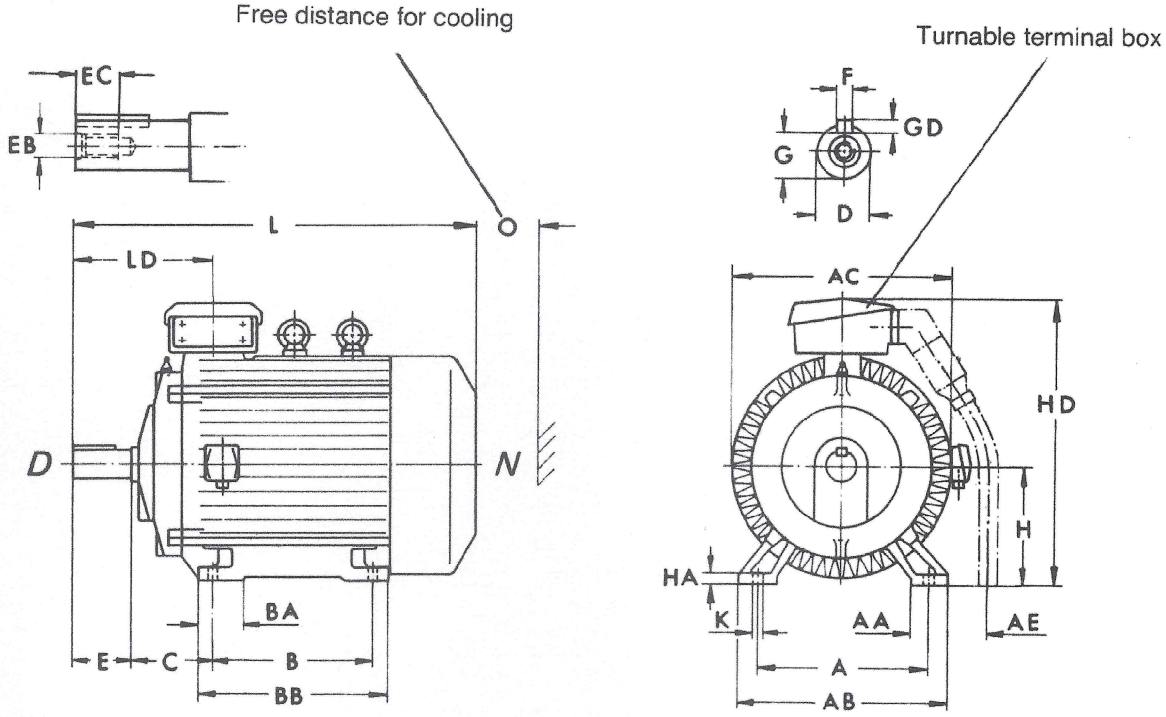

When mounting a set of machines for the first time, place 2 mm metal sheets under the feet of the motor.

Type 4)	I.E.C. frame No. 5)	A	AA	AB	AC	AE app.	B	BA	BB	C	D 1)	D tol.	D 2)	D tol.	E 1)	E 2)	EB 1)	EB 2)	EC 1)	EC 2)
HXUR 805 – –	400M –	686	150	820	825	270	630	200	760	280	75	+0,030 +0,011	110	+0,035 +0,013	140	210	M24	M36	48	70
HXUR 806 – –	400L –	686	150	820	825	270	710	200	840	280	75		110		140	210	M24	M36	48	70
HXUR 1001 – –	500 (A/B/C)D	850	170	1020	1040	170	630	230	800	355	80		110		170	210	M30	M36	60	70
HXUR 1005 – –	500 (A/B/C)D	850	170	1020	1040	170	800	230	970	355	80		110		170	210	M30	M36	60	70
HXUR 1009 – –	500 (A/B/C)D	850	170	1020	1040	170	1000	230	1170	355	80		110		170	210	M30	M36	60	70

Type	F 1)	F 2)	G 1)	G 2)	GD 1)	GD 2)	H	H tol.	HA	HD ⩽	K	L 1)	L 2)	LD 1)	LD 2)	O	Bearings 3) D-end 1)	D-end 2)	N-end 1)	N-end 2)	Wt. app. kg
HXUR 805 –	20	28	67,5	100	12	16	400		60	1050	35	1500	1570	415	485	130	6319	6324	6319	6322	5)
HXUR 808 – –	20	28	67,5	100	12	16	400	–0	60	1050	35	1620	1690	415	485	130	6319	6324	6319	6322	5)
HXUR 1001 – –	22	28	71	100	14	16	500	–1.0	70	1260	42	1715	1755	480	520	150	6319	6324	6319	6324	5)
HXUR 1005 – –	22	28	71	100	14	16	500		70	1260	42	1885	1925	480	520	150	6319	6324	6319	6324	5)
HXUR 1009 – –	22	28	71	100	14	16	500		70	1260	42	2135	2175	480	520	150	6319	6324	6319	6324	5)

1) ns = 3000 r/min
2) ns ⩽ 1500 r/min
3) The complete bearing designation, including clearance class, design modification, etc., is marked on the motor rating plate.
4) The direction of rotation in accordance with the order if ns = 3000 r/min.
5) See tables on pages 4 . . . 5.

Three-phase Squirrel Cage Motors HXUR, 6000 V and 6300 V, 50 Hz

Degree of protection IP 55 Cooling method IC-0141 Insulation class F (155)

Type	P_2 kW	n r/min	I_N (6000V) A	$\frac{I_s}{I_N}$	$\frac{T_s}{T_N}$	$\frac{T_{max}}{T_N}$	cos φ	η %	m kg	J kgm²	I.E.C. frame No. Mount. disp. IM B3
3000 r/min synchronous											
HXUR 808G1	250	2978	29	6,2	0,9	2,3	0,89	94,0	2600	7	400L75
1001H1	315	2980	37	6,5	0,8	2,8	0,87	94,2	3800	12	500(850/630/355)D80
1001G1	400	2980	46	6,5	0,8	2,7	0,88	95,0	4000	14	500(850/630/355)D80
1005H1	500	2980	57	6,5	0,8	2,5	0,89	95,5	4750	17	500(850/800/355)D80
1005G1	630	2982	71	6,8	0,8	2,4	0,89	96,0	5000	19	500(850/800/355)D80
1009H1	800	2980	87	6,8	0,8	2,7	0,92	96,5	6300	26	500(850/1000/355)D80
1009G1	900	2982	99	7,0	0,8	2,5	0,91	96,5	6700	30	500(850/1000/355)D80
1500 r/min synchronous											
HXUR 805H2	250	1490	30,5	6,5	0,9	2,2	0,84	93,7	2300	9	400M110
808H2	315	1490	39	6,2	0,9	2,1	0,83	94,2	2550	11	400L110
808G2	400	1490	48	6,5	0,9	2,2	0,84	94,8	2830	13	400L110
1001H2	500	1490	58	6,2	0,9	2,1	0,88	95,0	3600	25	500(850/630/355)D110
1001G2	630	1490	73	6,2	0,8	2,1	0,87	95,5	3950	31	500(850/630/355)D110
1005G2	800	1490	92	6,5	0,9	2,1	0,87	96,0	4950	41	500(850/800/355)D110
1009G2	1000	1491	115	6,5	0,9	2,0	0,87	96,2	6400	56	500(850/1000/355)D110
1000 r/min synchronous											
HXUR 805G3	250	991	33,5	5,5	1,0	2,0	0,76	94,8	2500	10,5	400M110
808G3	315	991	42	5,5	1,0	2,0	0,76	95,0	2900	14	400L110
1001H3	400	992	48	5,8	1,0	2,1	0,85	95,3	3800	44	500(850/630/355)D110
1001G3	500	993	59	6,5	1,0	2,3	0,85	95,7	4150	51	500(850/630/355)D110
1005G3	630	994	75	6,5	0,9	2,2	0,84	96,0	5150	66	500(850/800/355)D110
1009G3	800	996	98	6,8	0,9	2,3	0,82	96,2	6600	93	500(850/1000/355)D110
750 r/min synchronous											
HXUR1001H4	250	742	33	5,3	0,9	2,0	0,78	94,7	3800	44	500(850/630/355)D110
1001G4	315	742	40	5,3	0,9	1,9	0,80	95,0	4150	51	500(850/630/355)D110
1005G4	400	742	51	5,3	0,9	2,0	0,80	95,3	5150	66	500(850/800/355)D110
1009H4	500	744	63	5,5	0,9	2,0	0,80	95,7	6050	80	500(850/1000/355)D110
1009G4	550	745	69	5,5	0,9	2,0	0,80	95,7	6600	93	500(850/1000/355)D110

We also manufacture modifications to the above-mentioned standard motors for other voltages, maximum 6600 V. The technical data according to the above table.
The rated current I_N given in the table corresponds to the voltage 6000 V. The rated current corresponding to other voltages (U) is calculated by multiplying this value with the voltage ratio 6000/U.

The technical data of the motors manufactured for other frequencies are available on request.